Test 3 **Essential Maths Book 8H Year End Test**

Calculators may be used

---

1. Work out the following using a calculator. Give answers correct to 2 decimal places.

a) $\dfrac{3.17 - 0.904}{1.6^2}$ (1 mark)

b) $\dfrac{25.9 \times 0.145}{10.8 - 2.91^2}$ (2 marks)

---

2. Copy each statement and fill in the missing numbers.

a) $\frac{4}{5} - \square = \frac{13}{35}$ (2 marks)

b) $-3 + \square - 4 = -11$ (1 mark)

c) $8.2 \div \square = 82000$ (1 mark)

---

3. The diagram shows a net for a cuboid. The side of each small square is 2cm long.

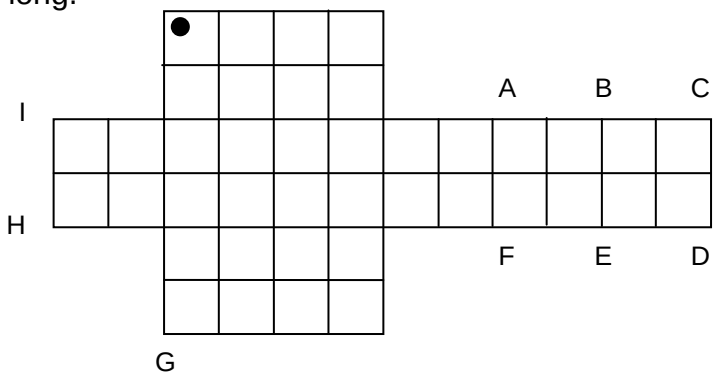

a) What is the volume of the cuboid? (2 marks)

b) When the net is folded two other corners will meet the corner marked with a dot (●). Use two of the letters A, B,....F to state which corners will meet the corner with a dot. (1 mark)

4. a) Change $\frac{5}{8}$ to a percentage. (1 mark)

b) A packet of grass seed costs £4.80.
Calculate the new price after a price reduction of 5%. (1 mark)

---

5. a) Calculate the length of the side marked x.
Give your answer correct to one decimal place. (2 marks)

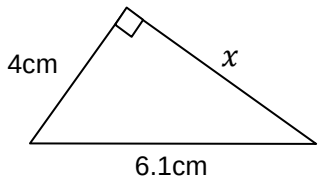

b) Work out the area of the triangle. Give your answer correct to one decimal place. (2 marks)

---

6. a) Calculate the volume of the cylinder shown.
Give your answer in m^3 correct to one decimal place. (2 marks)

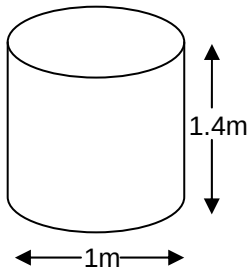

b) Water is poured into the cylinder at a rate of $20cm^3$/sec.
How long will it take to fill the cylinder? (2 marks)

---

7. a) This pointer is spun 60 times. How many times would you expect it to spin:

i) a 2 (1 mark)

ii) an even number (1 mark)

iii) a square number? (1 mark)

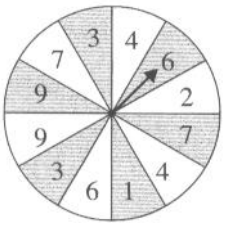

b) A fair dice is thrown 270 times. How many times would you expect to get a:

i) a 2 (1 mark)

ii) a multiple of 2 (1 mark)

iii) a 5 or a 6? (1 mark)

8.

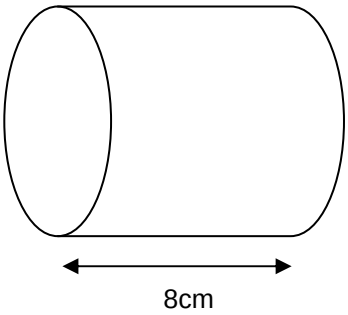

The volume of this cylinder is 360 cm^3.
Find the radius.
Give your answer correct to one decimal place. (3 marks)

9. Solve the equations to find the value of n

a) $5 - n = 12$ (1 mark)

b) $3n + 9 = 7n - 3$ (2 marks)

c) $6n - 2(3n - 1) = 4n$ (3 marks)

---

10. a) Draw the shaded triangle on squared paper.

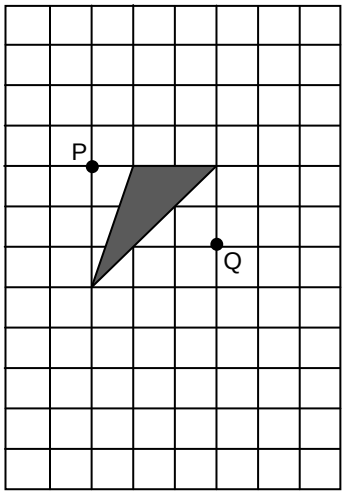

b) Rotate the triangle 90° anticlockwise around the point P.
Draw the triangle in its new position and label it triangle B. (1 mark)

c) Rotate the shaded triangle 90° clockwise around the point Q. Draw the triangle in its new position and label it triangle C. (1 mark)

d) Describe fully the rotation which maps triangle B onto triangle C. (2 marks)

---

11. Look at the sequence which starts

4 , 7 , 10 , 13 , ...

a) i) Write down the fifth term in the sequence. (1 mark)

ii) Write down the 20th term in the sequence. (1 mark)

b) Find an expression for the nth term in the sequence. (2 marks)

---

12. A delivery van can carry a maximum load of 4.5 tonnes.
It has to deliver large drums each of which weighs 0.41 tonnes.
How many drums can the van carry? (2 marks)

13. Draw a copy of the diagram on squared paper.

Draw an enlargement of the shape with scale factor 3 and centre of enlargement C.

(2 marks)

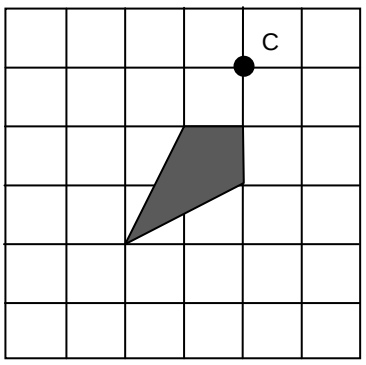

---

14. a) Copy and complete the table below for the line $y = 2x + 3$

x	-2	-1	0	1	2
y		1			

(2 marks)

b) Draw the graph of $y = 2x + 3$ on squared paper. (2 marks)

c) Write down the coordinates of the point where the line $y = 2x + 3$ crosses the x axis. (1 mark)

---

15. a) Jack has a fish pond in the shape of a cuboid.
It is 2m wide, and 5m long.
The water is 0.5m deep.
Calculate the volume of the water in m^3.

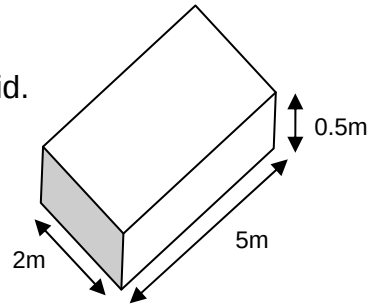

b) To prevent weeds growing Jack uses a water treatment.
The instructions say that he should use 20 millilitres of water treatment for every 50 litres of pond water.
How much water treatment should he use?
[$1m^3$ = 1000 litres] (2 marks)

---

16. a) Calculate the length of the side marked y.
(3 marks)

b) Work out the area of triangle ABC.
(2 marks)

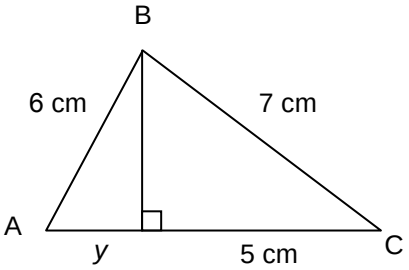

17. Write each statement and fill in the missing numbers.
The first is done for you.

	5 is 50% of 10	10 is 200% of 5
a)	6 is ..... % of 24	24 is ..... % of 6 (2 marks)
b)	40 is ..... % of 50	50 is ..... % of 40 (2 marks)
c)	*a* is 20% of *b*	*b* is ..... % of *a* (2 marks)

---

18. Here is a sequence of shapes made from sticks.

Let n = shape number and s = number of sticks

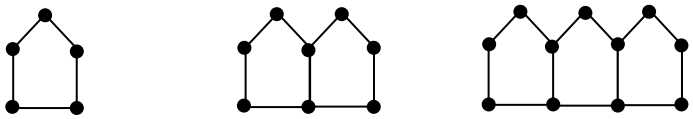

$n = 1$, $s = 5$ | $n = 2$, $s = 9$ | $n = 3$, $s = 13$

a) Draw the next shape in the sequence. (1 mark)
b) Find a formula for the number of sticks(s) for the shape number n. (2 marks)
c) Use your formula to find out how many sticks are in shape number 50. (1 mark)

---

19. a) If $\frac{3}{8}$ of the passengers on a train are male, what is the ratio of males to females? (1 mark)

b) The sum of two numbers n and m is 45.
The number n is 9 less than m.
Work out the ratio $n : m$. (2 marks)

---

20. The width of a rectangle is $(x + 4)$ cm
and its perimeter is $(10x + 18)$ cm.
The length of the rectangle is 25cm.

a) Form an equation involving x and solve it to find the value of x. (3 marks)
b) Find the area of the rectangle. (1 mark)
c) Find the length of each diagonal of the rectangle. (2 marks)