Test 1 **Essential Maths 9C Units 1 & 2**

Calculators are required

---

1. Work out the following. You must show your working.

(a) 455 ÷ 7 (1 mark)

(b) 7426 - 3818 (1 mark)

(c) 1.36 ÷ 0.4 (1 mark)

---

2. Look at the diagram.
Name the following shapes
(a) A B C D (1 mark)
(b) E F D C (1 mark)
(c) D F G H (1 mark)

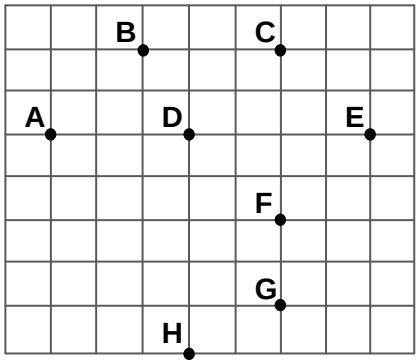

---

3. An empty paint can holds ½ litre.
How much paint is in the can when it is ¾ full? (2 marks)

---

4. Write in index form

(a) 3 x 3 x 3 x 3 x 3 (1 mark)

(b) n x n x n (1 mark)

(c) 8^3 x 8^7 (1 mark)

---

5. Simplify the following expressions

(a) $4a$ x $5a$ (1 mark)

(b) $4(x + 3) + 2x$ (1 mark)

(c) $9(t - 2) + 3(2t + 5)$ (2 marks)

6. Find the angles marked with letters

(a)

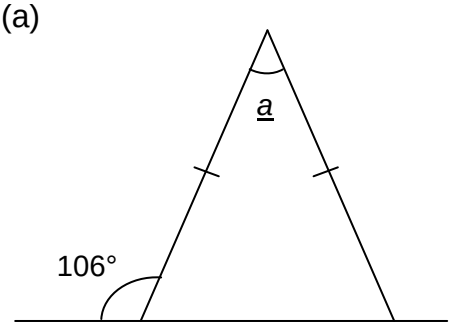

(1 mark)

(b)

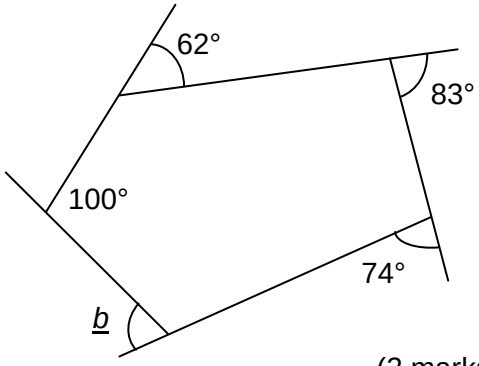

(2 marks)

---

7. Work out the following

(a) $\frac{2}{5} \times \frac{3}{7}$ (1 mark)

(b) $\frac{7}{8} - \frac{1}{4}$ (2 marks)

---

8. Factorise the expressions

(a) $18m + 24n$ (1 mark)

(b) $9t^2 + 7t$ (1 mark)

(c) $4n^2 - n$ (1 mark)

---

9. On squared paper draw axes with values of x and y from 0 to 14.

(a) Plot the points in the table below on a scatter graph.

x	6	12	2	9	13	11	4	12	6
y	5	2	8	4	2	4	8	3	7

(1 mark)

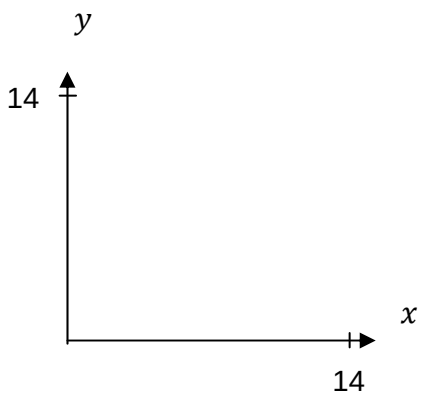

(b) Describe the correlation, if any. (1 mark)

(c) *If possible* draw a line of best fit and estimate
The value of y where $x = 8$ (2 marks)

10. Use a calculator to work out the following correct to 2 decimal places

(a) $\frac{11.7}{3.95} - \frac{2.6}{1.93}$ (1 mark)

(b) 6.4% of 3.98^3 (1 mark)

---

11. Work out (a) $5^1 + 4^2 + 3^3 + 2^4 + 1^5$ (2 marks)

(b) $0.1^2 \times 1000 \times 0.36$ (1 mark)

---

12. Here is an equation: $2a + b = 20$

Write three different solutions to the equation.

For each solution write a = ….., b = …. (3 marks)

---

13. A square field has an area of 450m^2.

Find the length of one side of the field.

Give your answer in metres correct to one decimal place. (2 marks)

---

14. Write an estimate for each calculation below.
You must show your working.

(a) $\frac{8089 - 483}{9.76}$ (1 mark)

(b) 19.4% of £605.75 (1 mark)

(c) $3.15^3 \times 959.1$ (1 mark)

15.

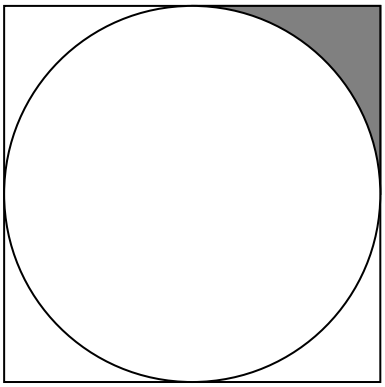

8 cm

The diagram shows a circle which touches the sides of a square of side 8cm.

Calculate the area of the shaded region.

Give your answer correct to one decimal place. (3 marks)

16. Solve the equations

(a) $21 = 5x - 1$ (1 mark)

(b) $3(2x - 3) = x - 1$ (1 mark)

---

17. A jar has a mass of 270g when empty. When it is full of peanuts the total mass is 1220g.

What is the mass of the jar when it is 40% full? (2 marks)

---

18. The drawing shows a quarter circle.

Calculate the perimeter of the shape.

Give your answer correct to one decimal place.

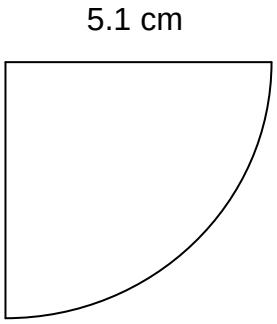

(3 marks)

---

19. I am thinking of a number. If I multiply the number by 6 and subtract 10, I get the same answer as when I add 3 to the number and then double the result.

Find the number I am thinking of. Show your working. (3 marks)

---

20. A circular pond of radius 3.2m is surrounded by a concrete path 80 cm wide.

(a) Draw a diagram showing the pond and the path.

(b) Calculate the area of the surface of the path. (3 marks)